SCREW TORQUE IN ACCORDANCE WITH EL.UN.0106 (Coppia di serraggio viti secondo normativa EL.UN.0106)	
MATERIALS (Materiali) - BLOWER (Ventola) - HOUSING (Coclea) - BRACKET (Squadretta) - SCREWS, WASHERS AND NUTS (Viti, Dadi e Rondelle)	ALUMINIUM - Strip Wheels (Alluminio - da nastro) GALVANIZED IRON SHEET (Lamiera Zincata) GALVANIZED IRON SHEET (Lamiera Zincata) GALVANIZED IRON (Zincati)
BALANCING GRADE (Grado di Bilanciatura)	**G. 6,3**
ELECTRICAL SPECIFICATION (Prescrizione di Collaudo)	**G. 1742/3B**
Accessories KIT - Right & Left Support (if Required) 3-410-001	

This Fan Motor is suitable only for kitchen hood < 280W and consequently not subject to ErP 327/2011 regulation implementing directive 2009/125/EC

Questa apparecchiatura è destinata unicamente per l'utilizzo nelle cappe aspiratrici da cucina < 280W quindi non soggetta alla direttiva 2009/125/CE

CODE: DEAR41BB05R
TYPE: DD 7/7 145-4P-1V-M / 284

230V 1~ 50/60Hz 145W 1300Rpm 5µF 450 VL
1,8 Amax (50 Hz) - 1,9 Amax (60Hz)
TH.Prot. CL. F IP54 Win@ ηmax.=191W
MOTOR : 40101204/50 DATE

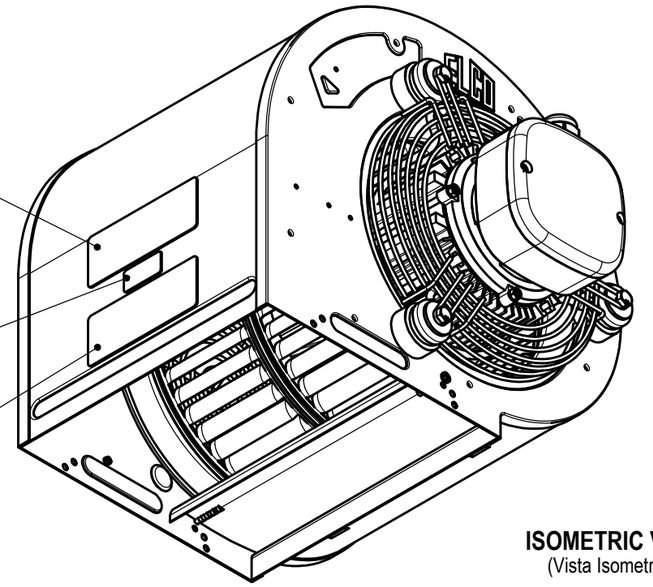

ISOMETRIC VIEW
(Vista Isometrica)

SECTION B-B
(Sezione B-B)

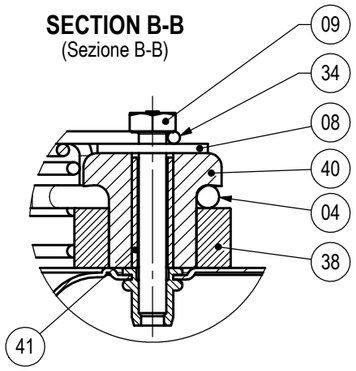

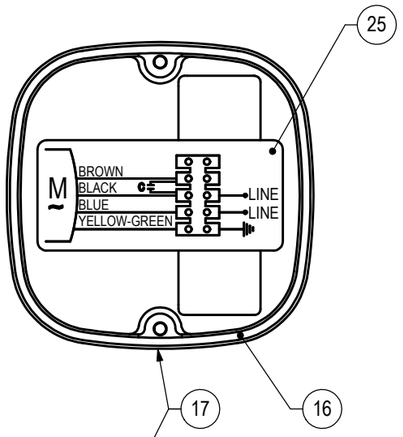

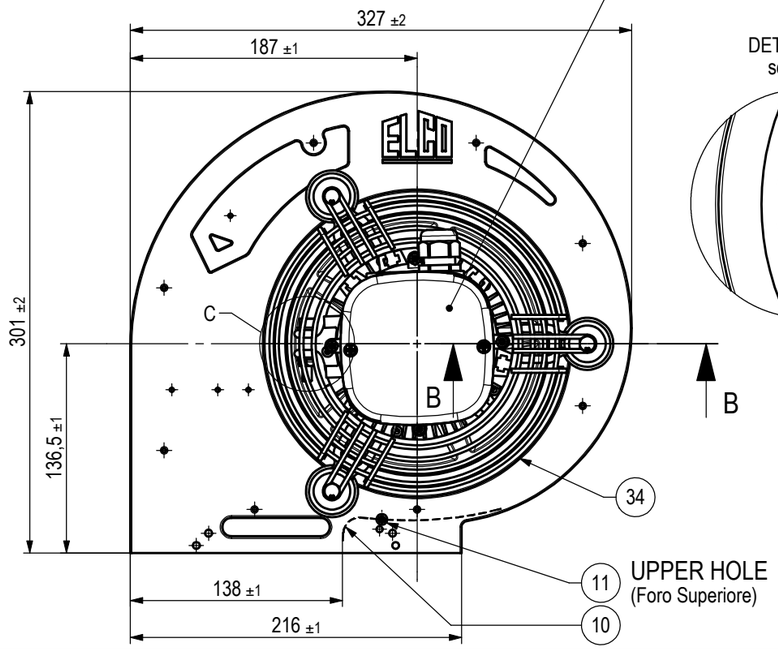

DETAGLIO "C"
scakla 1:2

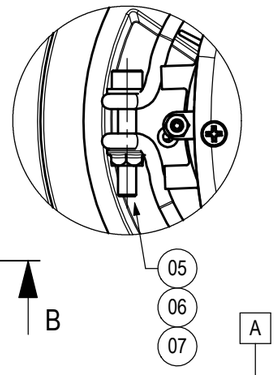

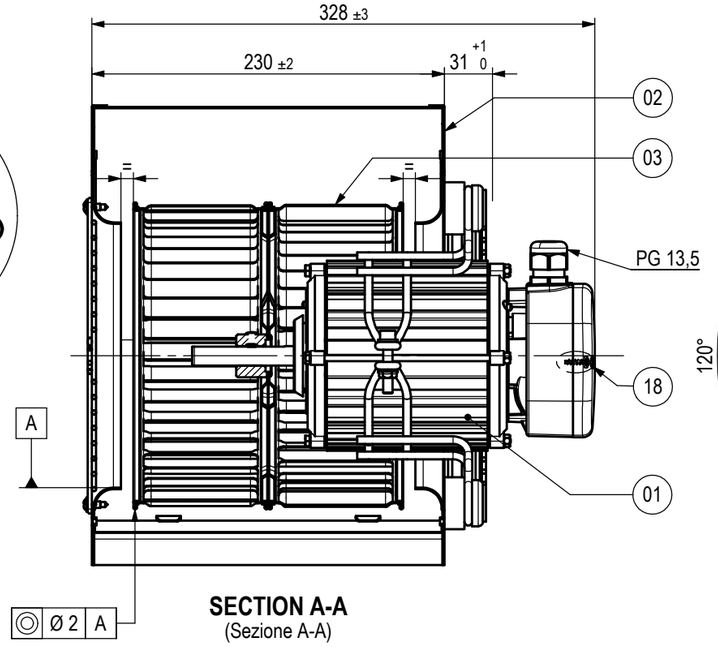

SECTION A-A
(Sezione A-A)

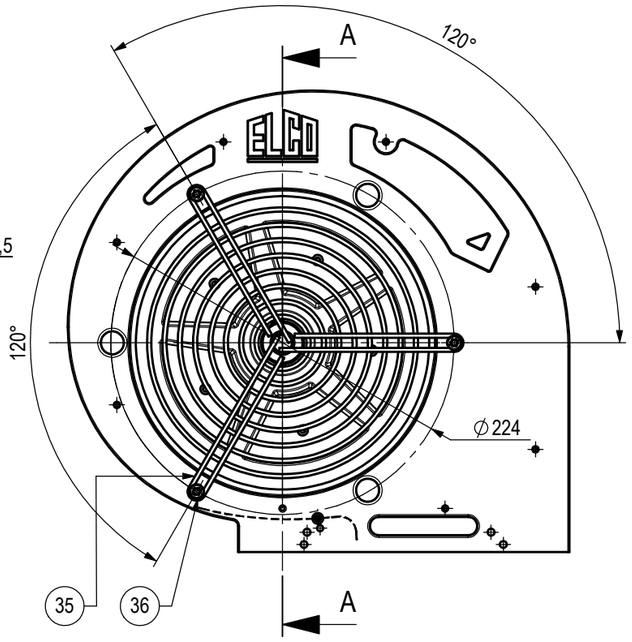

Rel.	Date	Description	Executor signature	Checked
.	.	.	.	.
.	.	.	.	.
.	.	.	.	.
.	.	.	.	.
.	.	.	.	.
.	.	.	.	.

M O D I F I C A T I O N S

For dimension without tollerance see standard UNI EN 22768-mK

Treatement .
Material .

A3

Drawn D.Riboldi
Date 27-11-2014
Check
Scale ---

CENTRIFUGAL BLOWER
230V 1~ 50/60Hz
DD 7/7 145-4P-1V-M/ 284

Weight gr. .
Ref. No DEAR41BB08
Release -

DEAR41BB05R

DRAWING MADE BY **CAD** HAND MADE MODIFICATIONS ARE FORBIDDEN

THIS DRAWING IS OUR PROPERTY. ANY PARTIAL OR COMPLETE COPY IS FORBIDDEN WITHOUT PREVIOUS WRITTEN AUTHORISATION